LDPMS

USER'S MANUAL

PRESSURE MONITORING SYSTEM

LDPMS

Pressure Monitoring System

USER'S MANUAL
V1.1

Printed in Canada

Table of Contents

Page

1. Forewarning

This manual is required to be read by any user that wants to use the LDPMS Pressure Monitoring System. It contains important information to successfully operate this instrument. LDetek assumes that all operators have taken the time to read this information prior to installation, operating and troubleshooting this system.

If any error is suspected by the reader, please contact LDetek. LDetek reserves the right to make any changes to subsequent editions of this document without prior notice to holders of this edition.

We want to thank you for choosing LDetek as your gas equipment supplier.

2. Warranty, maintenance and service policies

Goods and part(s) (excluding consumable) manufactured by the seller are warranted to be free from defects in workmanship and material under normal use and service for a period of **twelve (12)** months after installation and start-up and not exceeding **18 months** from shipment date. Consumable, chemical trap, O-rings, etc., are warranted to be free from defects in workmanship and material under normal use and service for a period of ninety (90) days from the date of shipment by the seller. Goods, part(s) proven by the seller to be defective in workmanship and/or material shall be replaced or repaired, free of charge, F.O.B. Seller's factory provided that the goods, part(s) are returned to Seller's designated factory, transportation charges prepaid, within the twelve (12) months after installation and start-up and not exceeding 18 months from shipment date. In the case of consumable, within the ninety (90) days period of warranty, a defect in goods, part(s) and consumable of the commercial unit shall not operate to condemn such commercial unit when such goods, part(s) and consumable are capable of being renewed, repaired or replaced.

The Seller shall not be liable to the Buyer, or to any other person, for the loss or damage directly or indirectly, arising from the use of the equipment of goods, from breach of any warranty, or from any other cause.

ALL OTHER WARRANTIES, EXPRESSED OR IMPLIED ARE HEREBY EXCLUDED.

IN CONSIDERATION OF THE HEREIN STATED PURCHASE PRICE OF THE GOODS, SELLER GRANTS ONLY THE ABOVE STATED EXPRESS WARRANTY. NO OTHER WARRANTIES ARE GRANTED INCLUDING, BUT NOT LIMITED TO, EXPRESS AND IMPLIED WARRANTIES OF MERCHANTABILITY AND FITNESS FOR A PARTICULAR PURPOSE.

THIS WARRANTY IS THE ONLY WARRANTY MADE BY LDETEK INC. WITH RESPECT TO THE GOODS DELIVERED HEREUNDER, AND NO EMPLOYEE, REPRESENTATIVE OR OTHER PERSON OR ENTITY IS AUTHORIZED TO ASSUME FOR LDETEK INC ANY OBLIGATION OR LIABILITY BEYOND OR AT VARIANCE WITH THIS WARRANTY IN CONNECTION WITH THE SALE OF LDETEK PRODUCTS.

Limitations of Remedy. SELLER SHALL NOT BE LIABLE FOR DAMAGES CAUSED BY DELAY IN PERFORMANCE. THE SOLE AND EXCLUSIVE REMEDY FOR BREACH OF WARRANTY SHALL BE LIMITED TO REPAIR OR REPLACEMENT UNDER THE STANDARD WARRANTY CLAUSE. IN NO CASE, REGARDLESS OF THE FORM OF THE CAUSE OF ACTION, SHALL SELLER'S LIABILITY EXCEEDS THE PRICE TO BUYER OF THE SPECIFIC GOODS

MANUFACTURED BY SELLER GIVING RISE TO THE CAUSE OF ACTION. BUYER AGREES THAT IN NO EVENT SHALL SELLER'S LIABILITY EXTEND TO INCLUDE INCIDENTAL OR CONSEQUENTIAL DAMAGES. CONSEQUENTIAL DAMAGES SHALL INCLUDE BUT ARE NOT LIMITED TO, LOSS OF ANTICIPATED PROFITS, LOSS OF USE, LOSS OF REVENUE, COST OF CAPITAL AND DAMAGE OR LOSS OF OTHER PROPERTY OR EQUIPMENT. IN NO EVENT SHALL SELLER BE LIABLE FOR PROPERTY DAMAGE AND/OR THIRD PARTY CLAIMS COVERED BY UMBRELLA INSURANCE AND/OR INDEMNITY COVERAGE PROVIDED TO BUYER, ITS ASSIGNS, AND EACH SUCCESSOR INTEREST TO THE GOODS PROVIDED HERE UNDER.

Major force. The seller is not liable for failure to perform due to labour strikes or acts beyond the seller's direct control.

SERVICE POLICY

1. If a product should fail during the warranty period, it will be repaired free of charge. For out of warranty repairs, the customer will be invoiced for repair charges at current standard labour and materials rates.

2. Customers who return products for repairs, within the warranty period, and the product is found to be free of defect, may be liable for the minimum current repair charge.

3. For parts replacement, the original part must be returned with serial and model numbers of the analyzer. **NO PART WILL BE SHIPPED IF THE ORIGINAL IS NOT SENT BACK TO LDETEK INC.**

RETURNING A PRODUCT FOR REPAIR

Upon determining that repair services are required, the customer must:

- Obtain an RMA (Return Material Authorization) number;
- Supply a purchase order number or other acceptable information;
- Include a list of problems encountered along with name, address telephone, and RMA number;
- Ship the device in its original crating or equivalent. Failure to properly package the analyzer will automatically void the warranty;
- Every gas connection must be capped with appropriate metal caps. Failure to do so, it will automatically void the warranty;
- Write RMA number on the outside of the box;
- Use an LDetek approved carrier. Also, the delivery must be sent to LDetek facilities. LDetek will not accept airport to airport delivery;
- LDetek will not cover the transportation fees.

Other conditions and limitations may apply to international shipments.

PROPRIETARY RIGHTS

Buyer agrees that any LDetek's software, firmware and hardware products ordered or included in the goods ordered are proprietary of LDetek. No change, modification, defacement, alteration, reverse engineering, neither software de-compilations nor reproduction of such software or hardware products, or disclosures of programming content to other parties is authorized without the express written consent of LDetek.

To maintain LDetek's trade secret and other proprietary protection of such software and firmware, such items are not sold hereunder but are licensed to the buyer.

LDetek Inc. reserves the right to interrupt all business relationship and warranty or service if there is any tentative from any customers to reverse engineering any of LDetek products or to tamper with any sealed module.

Trademarks and product identification as LDPMS are the property of
LDetek Inc. and shall be used only in connection with LDetek's products. No third party could remove or deface any model number or marks.

3. Specifications

The LDPMS is a stand-alone pressure monitoring system design to monitor the pressure of a gas source. It can monitor up to 2 gas sources simultaneously and generate an independent low-pressure alarm when the pressure level of a source is below its setpoint. If the pressure level for both sources is below the setpoint, a second alarm is generated, and a buzzer is activated. The pressure sensors use are heavy duty series operating from a low-pressure range of 0-50psig(0-6bar) up to 0-8000psig(0-550bar)

3.1 Power Input

AC Voltage	85 ~ 264VAC
Frequency Range	50 ~ 60Hz
AC Current (Typ.)	< 0.1A
Intern Fuses	1A (model 9611000440 of Littelfuse Inc. or compatible)
Connector Style	IEC 320-C14

3.2 Sensor Input

Full scale	0.5V to 4.5V (0 to 3000psi)
Sensor voltage supply	5V
Sensor current max.	0.8A for all sensors

3.3 Relay Output

Dry contact	N.O and N.C.
Rated load (resistive load)	0.4A at 120VAC 2A at 30VDC
Rated load	0.2A at 120VAC

(inductive load)	1A at 30VDC
Max switching voltage	250VAC, 220VDC

3.4 Serial Port

Type	RS-232
Connector	Male DE-9 (DB-9)
Protocol supported	Modbus RTU
Baud rate supported	9600, 19200, 38400, 57600
Parity	None
Data bits	8
Stop bits	1

3.5 Environment

Operating temperature	-20 to 70°C
Storage temperature	-30 to 80°C
Operating Relative Humidity	Maximum 90% non-condensing
Thermal Shock	Maximum 10°C /min

3.6 Dimensions

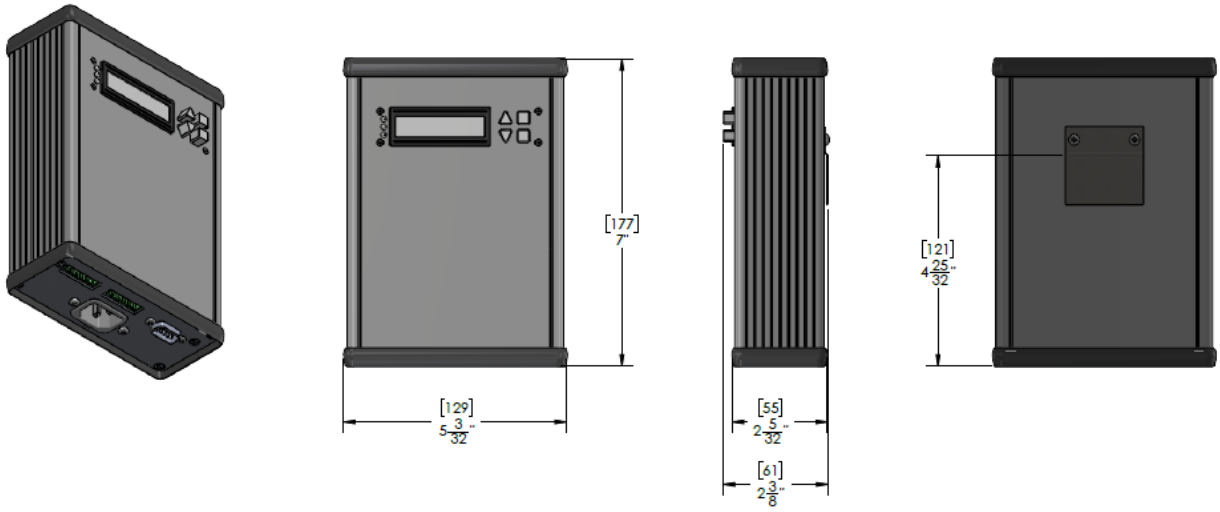

4. Wiring and installation information

4.1 Pressure sensors

The LDPMS is made to work with the family of Honeywell heavy duty pressure sensor series MLH . The sensor is supply with the 5VDC and the sensor output must go from 0.5V to 4.5V for its range of 0 to 3000 psi.

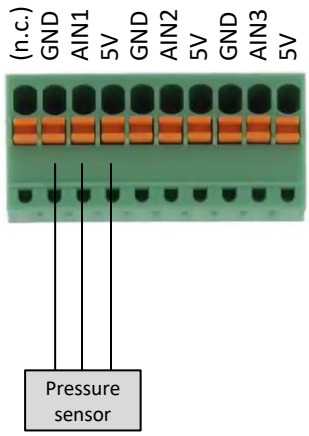

(n.c.)	(Not connected)
GND	Return for the 5VDC supply
5V	5VDC supply (0.8A for all 5V pin)
AIN1	Analog Input #1 for the sensor #1 output 0.5V to 4.5V
AIN2	Analog Input #2 for the sensor #2 output 0.5V to 4.5V
AIN3	(For future usage)

4.2 Relays

The status of the LDPMS can be obtain from the 4 relays on the device. You can connect any voltage from 250VAC or 220VDC or below. You can use the normally close or normally open contact from any relay.

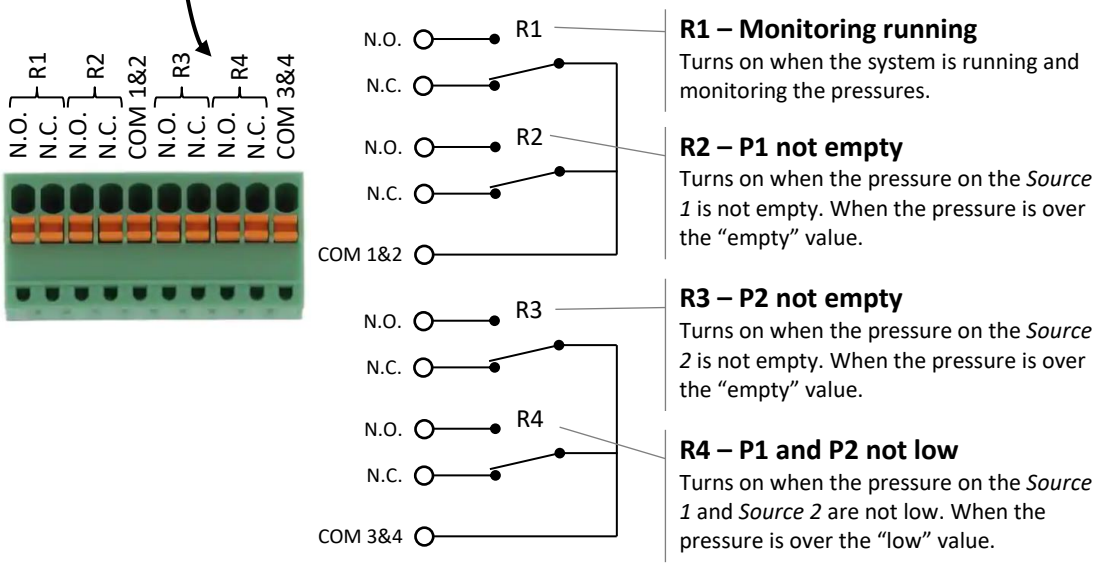

Note:

- If everything is fine, all relays are turned ON.
- If anything goes bad, a relay will turn OFF.
- It is designed to be "fail-safe", if the power is down or wire broken, you have more chance to detect it as a bad condition.

4.3 Modbus RTU

All the information contains in the LDPMS can be read by Modbus RTU using the RS-232 port. See the section about the Modbus mapping for more details about this information. To connect a computer and a LDPMS together use a DB-9 null-modem cable.

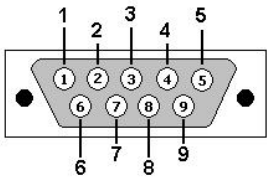

DB-9M pinout	Signal
1, 4, 6, 7, 8, 9	(Not connected)
2	RX
3	TX
5	GND
Case	(Not connected)

4.4 Main power

!!! ATTENTION !!!

Connect the AC main supply only when everything is correctly wired. Any bad wiring can damage this device, or any device connected to it.

Connect the power cord supply with the device into any AC outlet from 100VAC to 240VAC 50Hz-60Hz. You can use any power cord with an IEC 320-C14 end that fit your need.

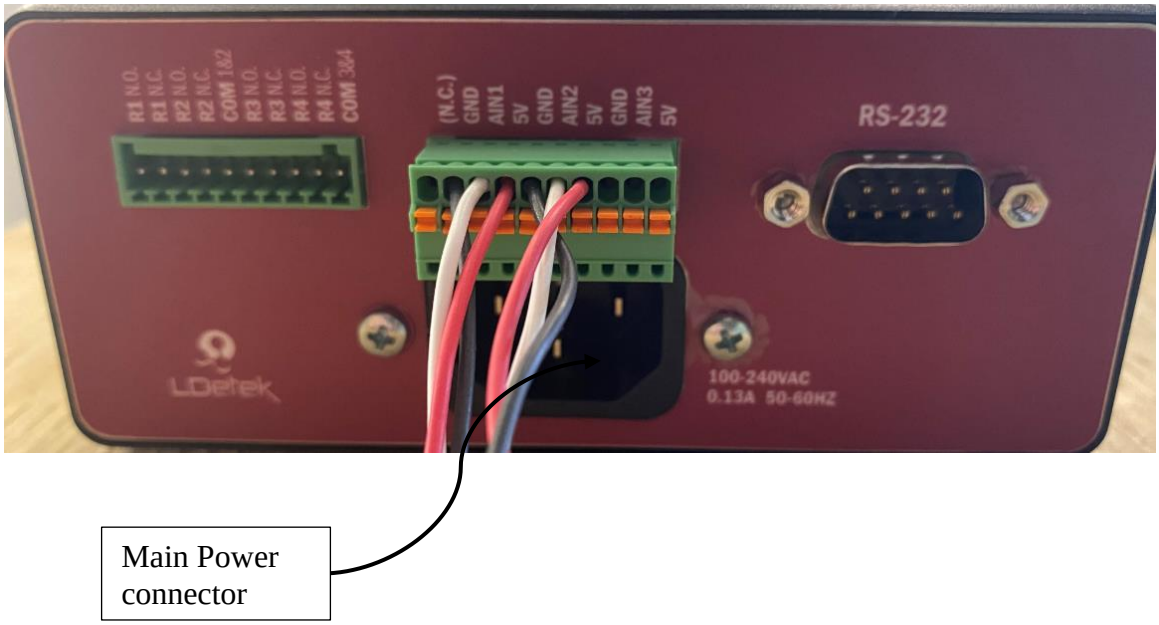

Main Power connector

5. Settings

5.1 Alarms

Source 1 Full Pressure	
On the display 1.1 P1 FULL	Description When the pressure on the *Source 1* is above this value, the cylinder is considered full.
Source 2 Full Pressure	
On the display 1.2 P2 FULL	Description When the pressure on the *Source 2* is above this value, the cylinder is considered full.
Source 1 Empty Pressure	
On the display 1.3 P1 EMPTY	Description When the pressure on the *Source 1* is below this value, the cylinder is considered empty.
Source 2 Empty Pressure	
On the display 1.4 P2 EMPTY	Description When the pressure on the *Source 2* is below this value, the cylinder is considered empty.
Source 1 and Source 2 Low Pressure	
On the display 1.5 P1 & P2 LOW	Description When the pressure on the *Source 1* and on the *Source 2* are below this value, this alarm is raised.

5.2 Device

Displayed unit	
On the display 2.1 UNIT	Description Select among all units available the unit you want to use on the display (does not affect Modbus register). Currently you can choose between `psi`, `kPa` and `bar`.
Inactivity delay	
On the display 2.2 INACTIVITY	Description This is the delay before the display goes in sleep mode. In sleep mode: • The brightness of the display goes to 50%. • The backlighting of the keypad goes off. • The display come back to the main menu. You can enter a value between 1 to 120 minutes.
Buzzer	
On the display 2.3 BUZZER	Description When a Low Pressure alarm occurs on the Source 1 and 2, if this settings is ON, the buzzer will emit sounds.

5.3 Modbus

Baud Rate	
On the display 3.1 BAUD RATE	Description You can select the baud rate for the serial port. You can choose between 9600, 19200, 38400 and 57600.
SLAVE ID	
On the display 3.2 SLAVE ID	Description This is the Slave ID of this device. Sometimes it can be called *node number*, *node address*… You can choose a value between 1 and 250.

6. Diagnostic

With the LDPMS you have access at some diagnostic tools.

6.1 Relays

On the display with the keypad, you can diagnostic the relays.

At first, you can see the actual state, ON or OFF.

RELAY #1 ON	or	RELAY #1 OFF

If you use the arrow up or down on the keypad you can force the relay at ON or OFF

RELAY #1 Force ON	or	RELAY #1 Force OFF

6.2 ADC

On the display with the keypad, you can diagnostic the voltage read on the analog inputs.

With the example below.

ADC #1 2429.78 mV

If we put a multimeter between the pin AIN1 and GND we should read a value close to 2430 mV.

7. Menu Layout

7.1 Main menus

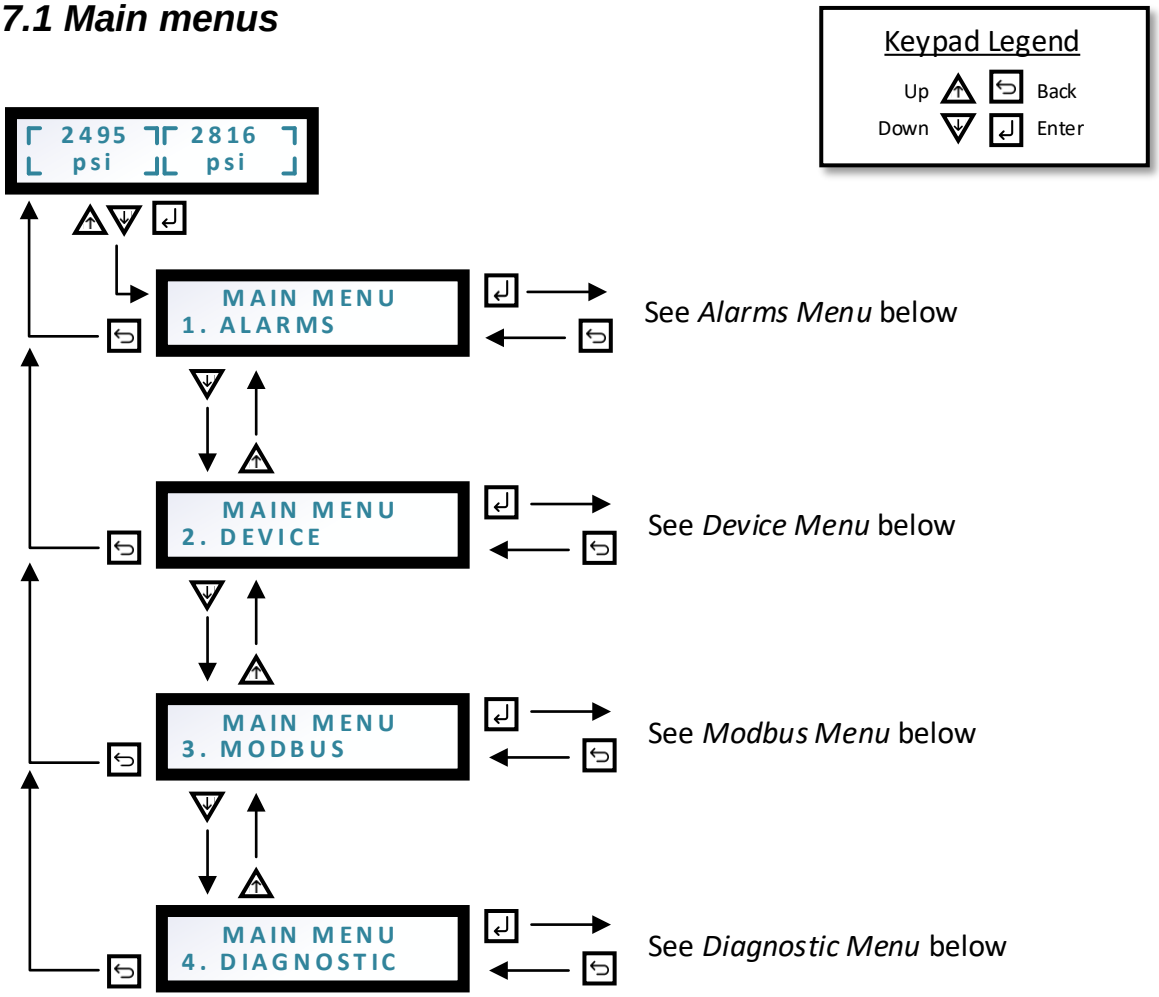

7.2 Alarms menus

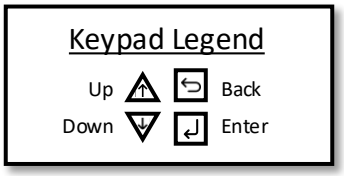

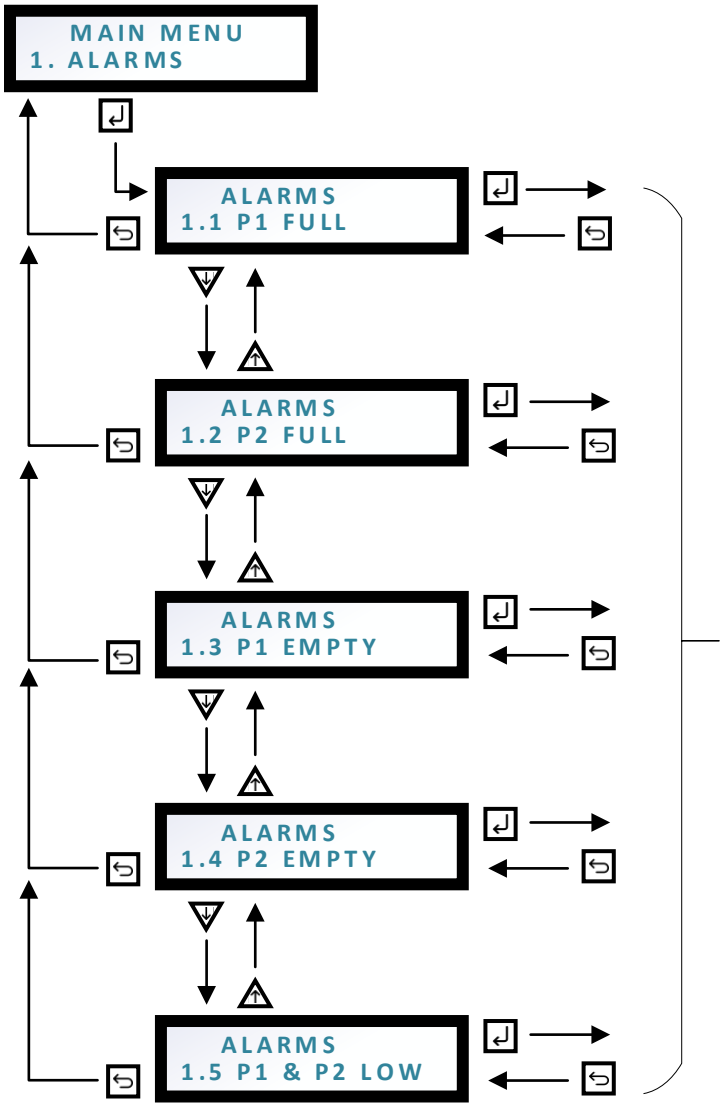

Use the Up and Down key to change each digit from 0 to 9.

Press Enter to accept the current digit and change the next digit.

Press Enter at the last digit to save the new value.

Press Back to cancel the modification.

7.3 Device menus

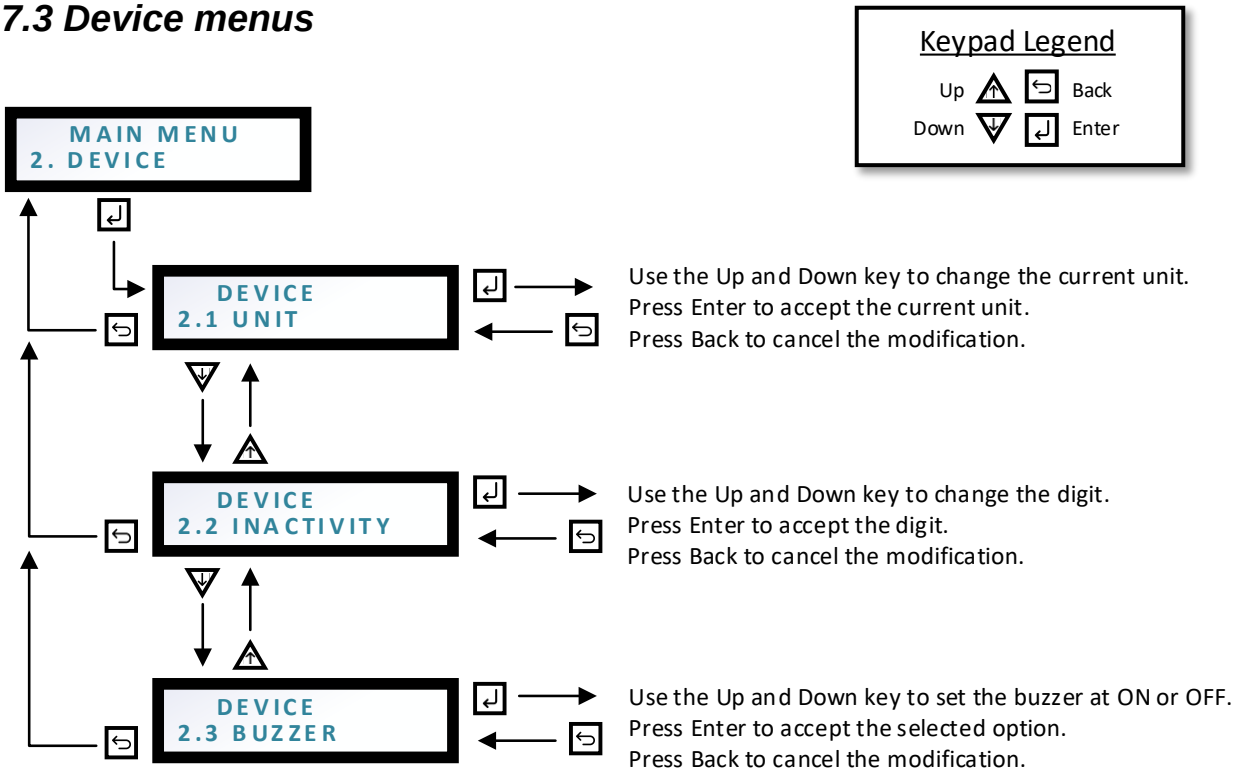

7.4 Modbus menus

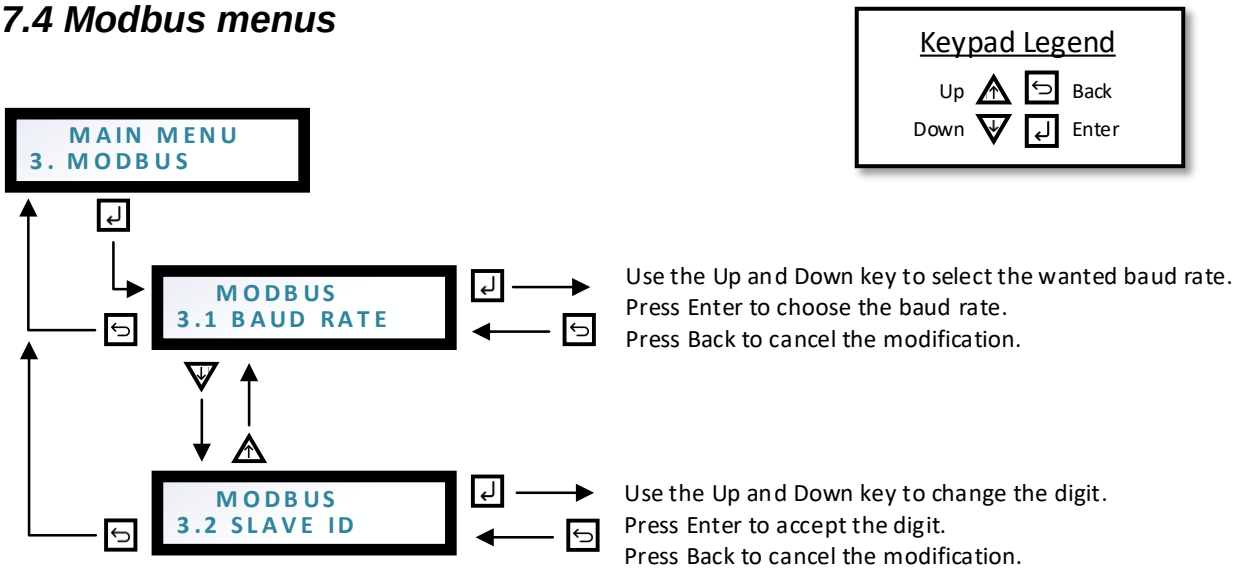

7.5 Diagnostic menus

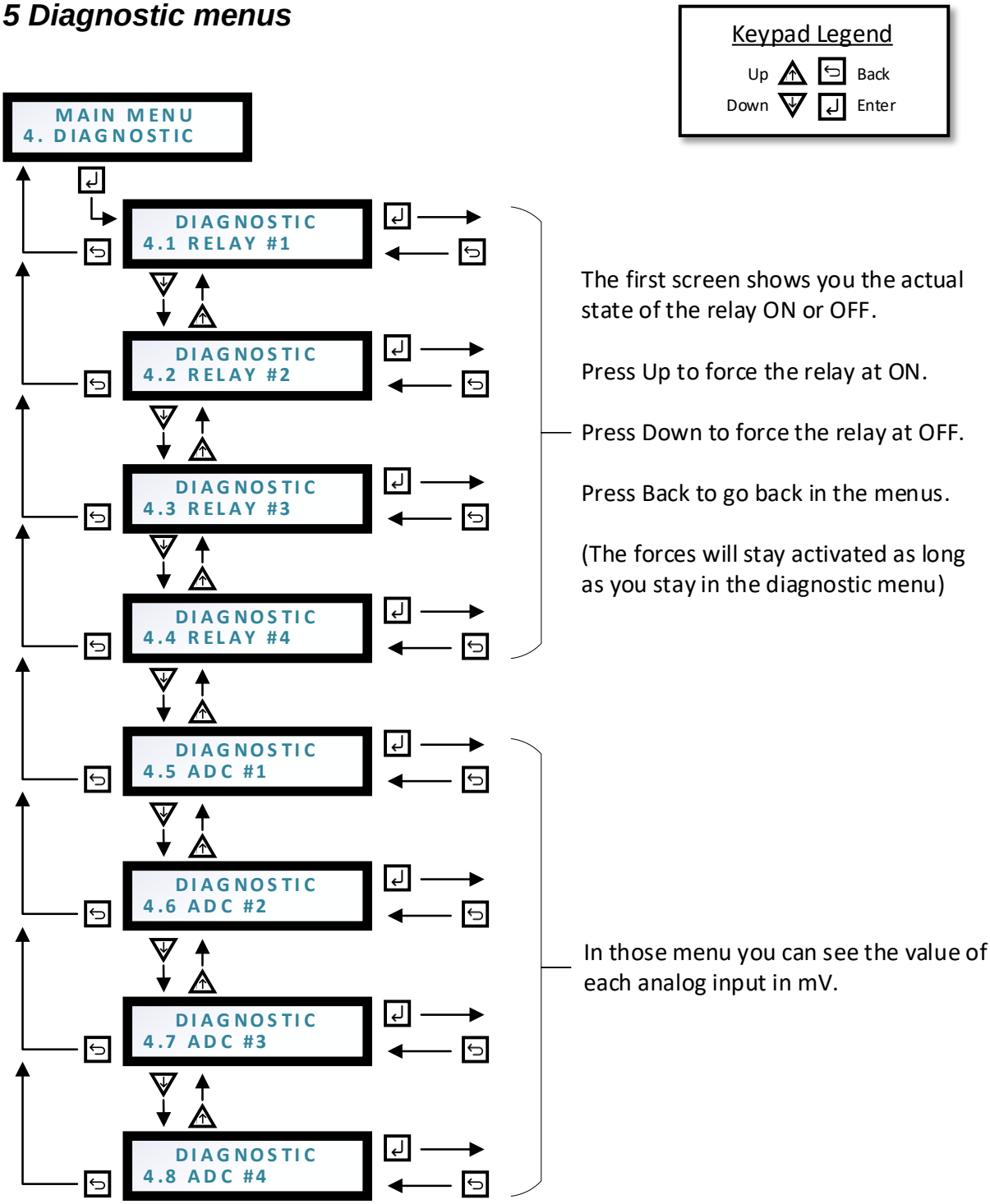

8. LEDs

The LDPMS has three LEDs on the front.

Status	Blinking green	Everything is fine.
	Blinking red	The pressure on Source1 and Source2 are below the "low pressure" value.
	Blinking faster than 1s	It is because it receives data on the Modbus.
Source 1	Solid green	Pressure is above the "full pressure" value.
	Off	Pressure is below the "full pressure" value and above the "empty pressure" value.
	Solid red	Pressure is below the "empty pressure" value.
Source 2	Solid green	Pressure is above the "full pressure" value.
	Off	Pressure is below the "full pressure" value and above the "empty pressure" value.
	Solid red	Pressure is below the "empty pressure" value.

9. Typical applications

9.1 Switchover

Installation on a switchover system to monitor the pressures and then maintain the carrier gas on a gas chromatograph system.

9.2 Typical MultiDetek2 gas chromatograph installation

The MultiDetek2 GC carrier gas source comes from a bank of Helium/Argon/Nitrogen cylinders inter-connected by an automatic switchover system & a LDPMS pressure monitoring system. The pressure sensor of each Helium source advises when one source is low, then ready for cylinder replacement.
In certain case when using Helium carrier gas and where the carrier gas purity is critical, after passing through the switchover system, the carrier gas source goes through the LDCryo trap system which is using cryogenic trap to remove trace Argon presents in Helium. The LDPMS is then use to advise if the outlet pressure become below a certain limit which advise the trap in use has to be replaced because it starts to be blocked by freeze contaminants.
Then, the carrier gas can go to the heated LDP1000 gas purifier and to the MultiDetek2 GC.

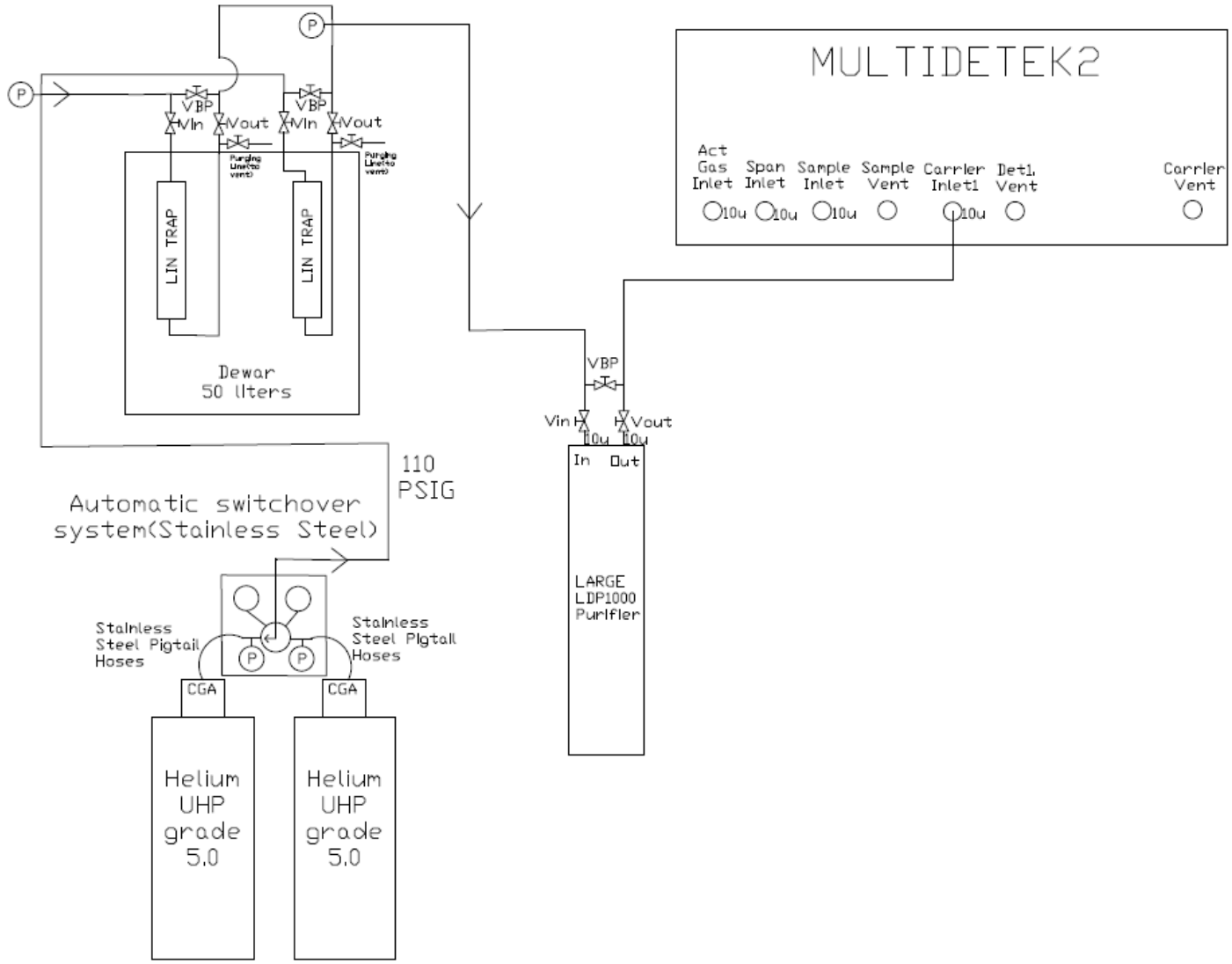

10. Modbus mapping

You can exchange data by Modbus RTU with a LDPMS.
The only function you need is the function 3, to read multiple holding registers.
If you attempt to send any other functions, they will be ignored, and you will not get a response.

10.1 Device Info

The device information section is the place where the device is described.

Register	R/W	Type	Description
41001	R	UINT16	LDetek Identification number, always 31307
41002	R	UINT16	Modbus version, start with 1000 and increment if future version make important change in the mapping.
41003	R	ASCII[16]	Product name
41011	R	ASCII[16]	Model name
41019	R	ASCII[16]	Serial number
41027	R	ASCII[16]	Software version

10.2 Device Status

The device status section is the place to get actual information on the device.

Register	R/W	Type	Description
42001	R	UINT16	Status word 1 • Bit00 : System is monitoring • Bit01 : Pressure1 is full • Bit02 : Pressure1 is empty • Bit03 : Pressure2 is full • Bit04 : Pressure2 is empty • Bit05 : Pressure1 and Pressure2 are low
42002	R	UINT16	Pressure1 in PSI
42003	R	UINT16	Pressure2 in PSI
42004	R	UINT16	Pressure3 in PSI
42005	R	UINT16	Pressure4 in PSI
42006	R	UINT16	Pressure1 full in PSI
42007	R	UINT16	Pressure1 empty in PSI
42008	R	UINT16	Pressure2 full in PSI
42009	R	UINT16	Pressure2 empty in PSI
42010	R	UINT16	Pressure1 and Pressure2 are low in PSI

LDetek

Where innovation leads to success